DREAMLINE PRO

(AC Input Connector)

Installation Manual

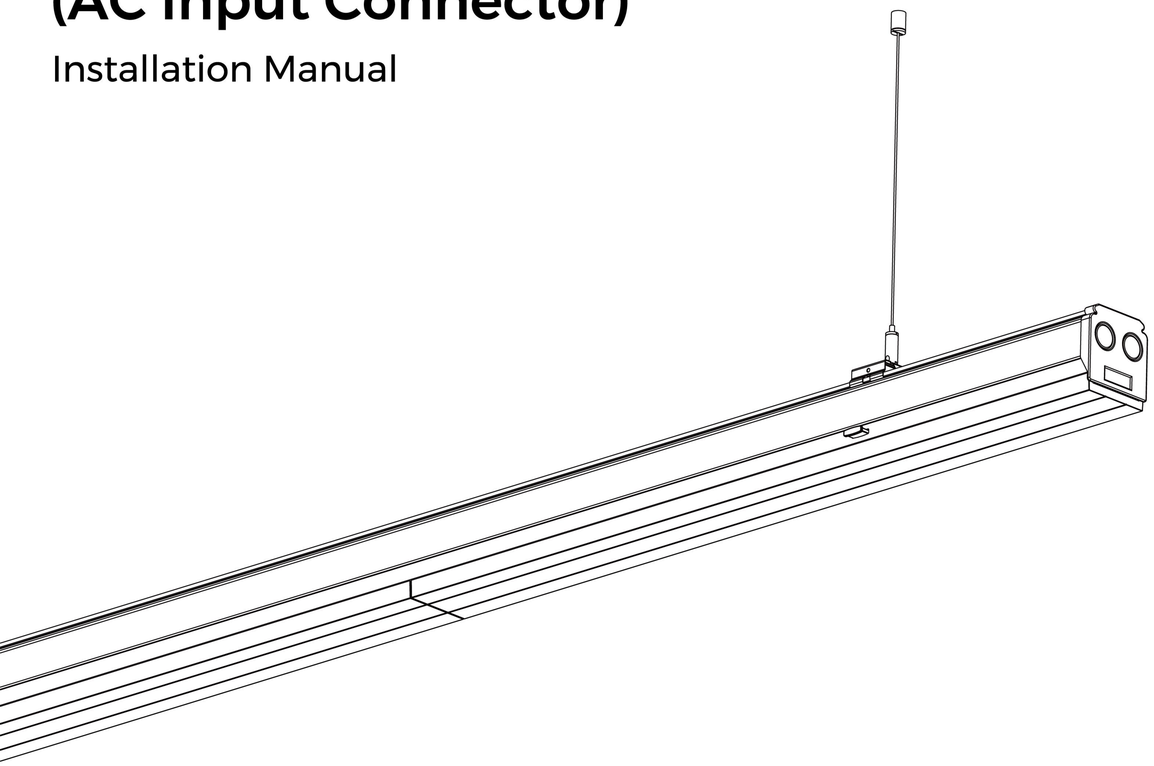

Thanks for choosing our product,please read this guide carefully before installation

IP20

Tools

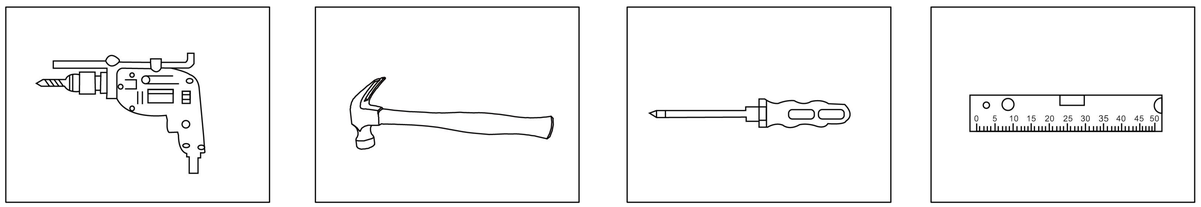

ACCESSORIES

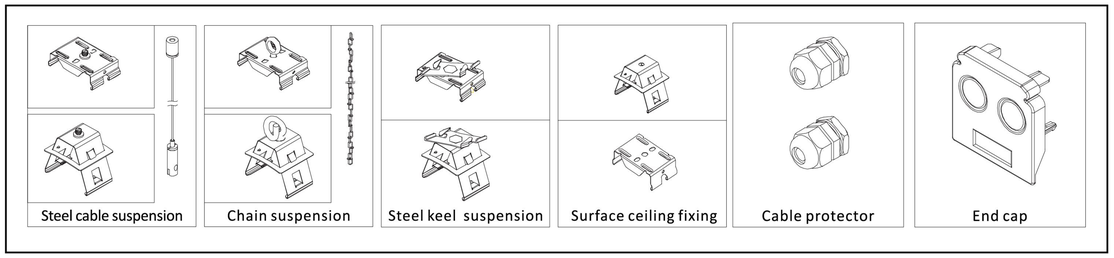

1.Turn off power and install fixing fittings.

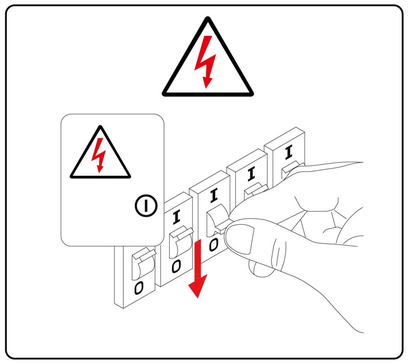

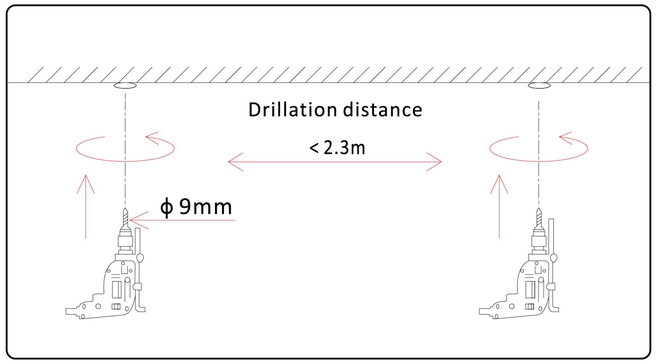

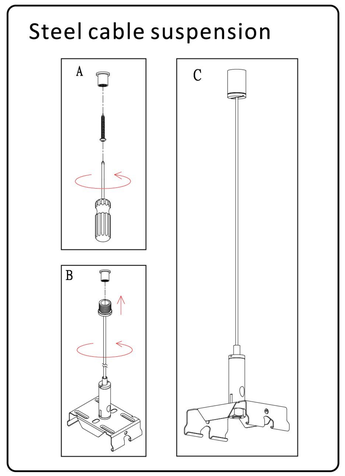

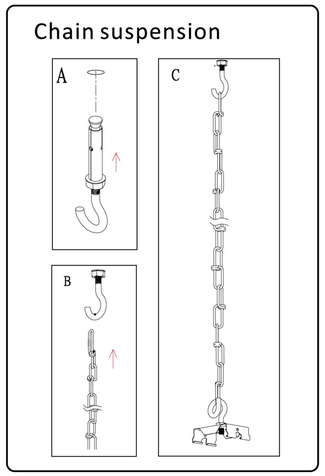

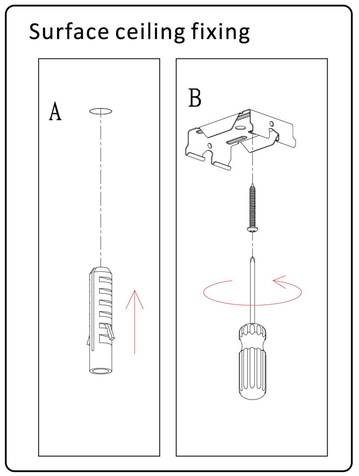

2.Connect power-supply wires.

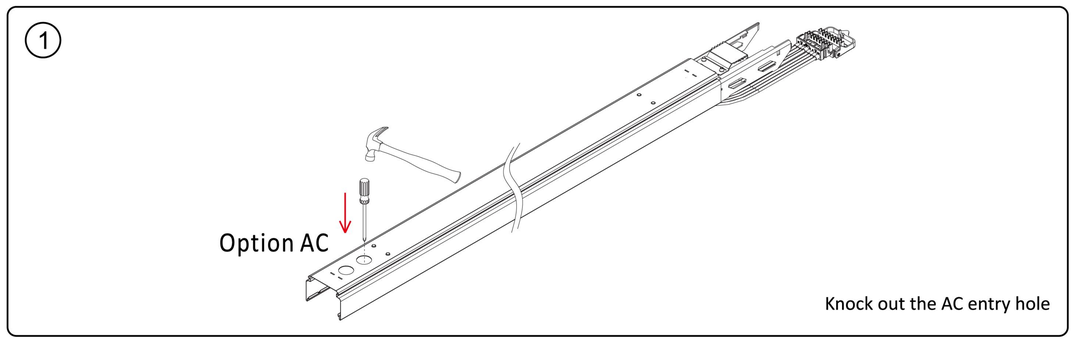

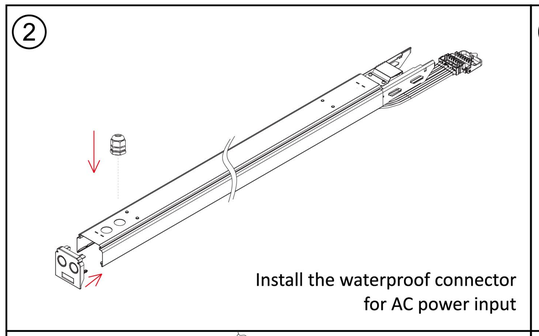

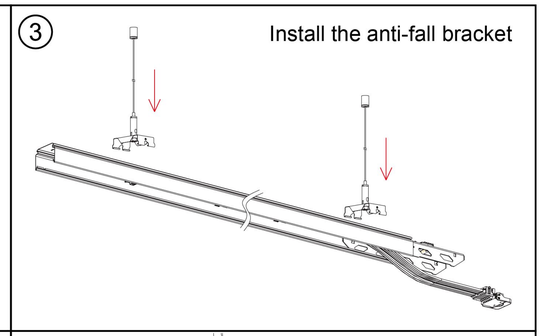

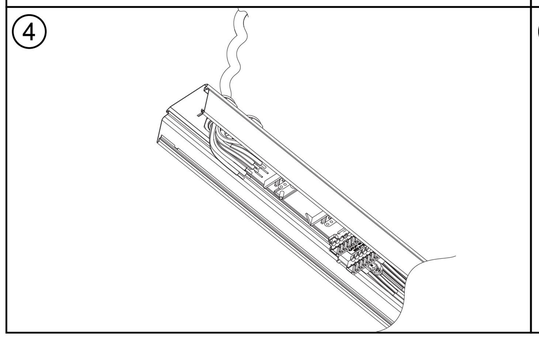

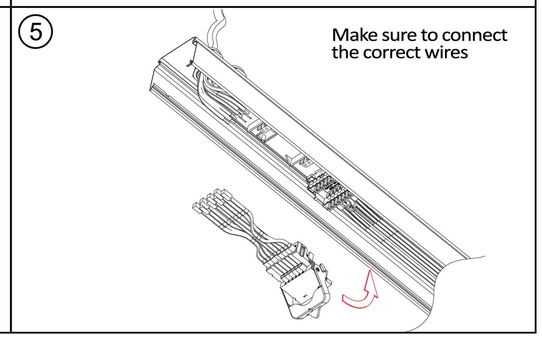

3.Connect trunks.

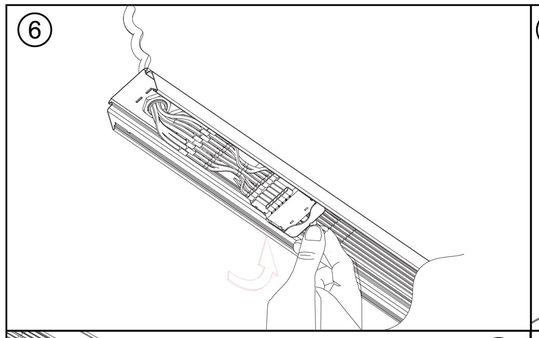

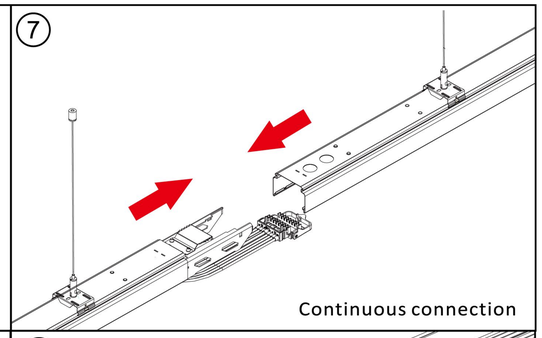

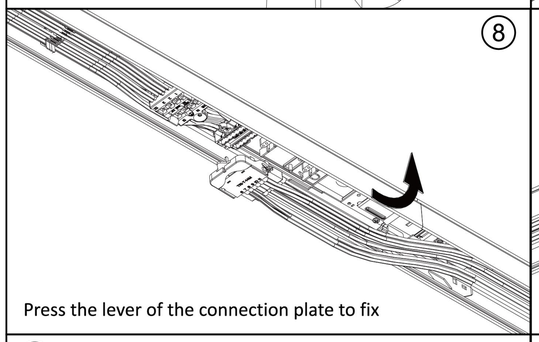

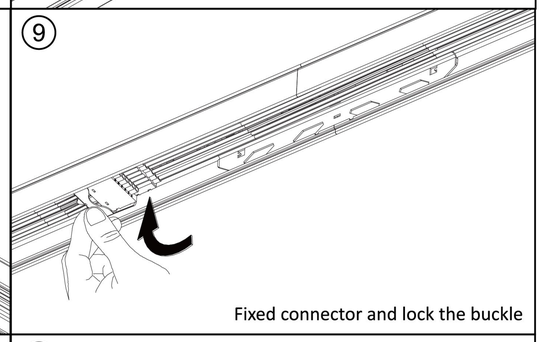

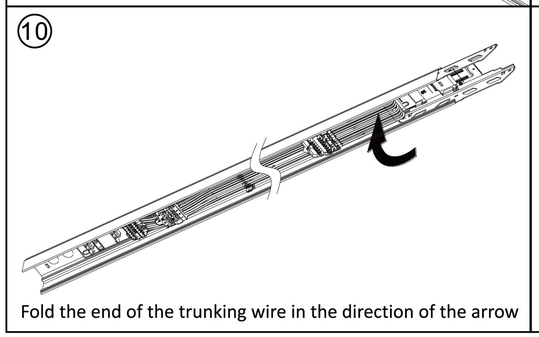

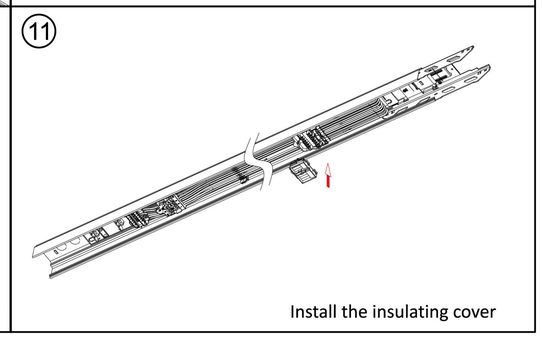

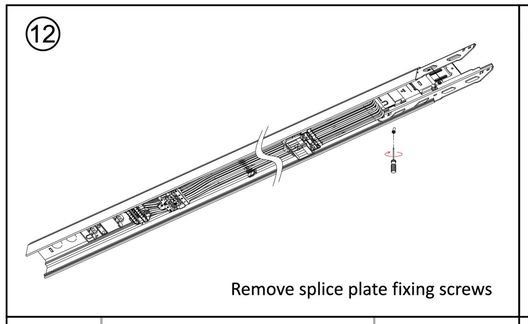

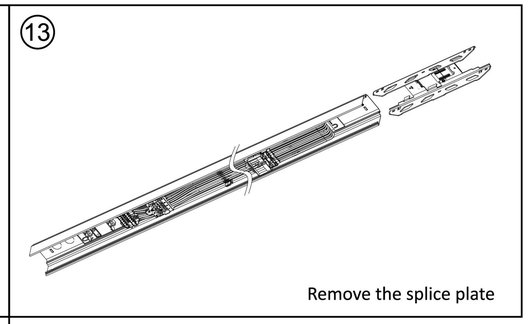

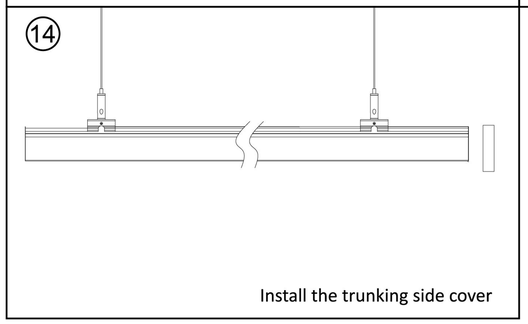

4.Module installation.

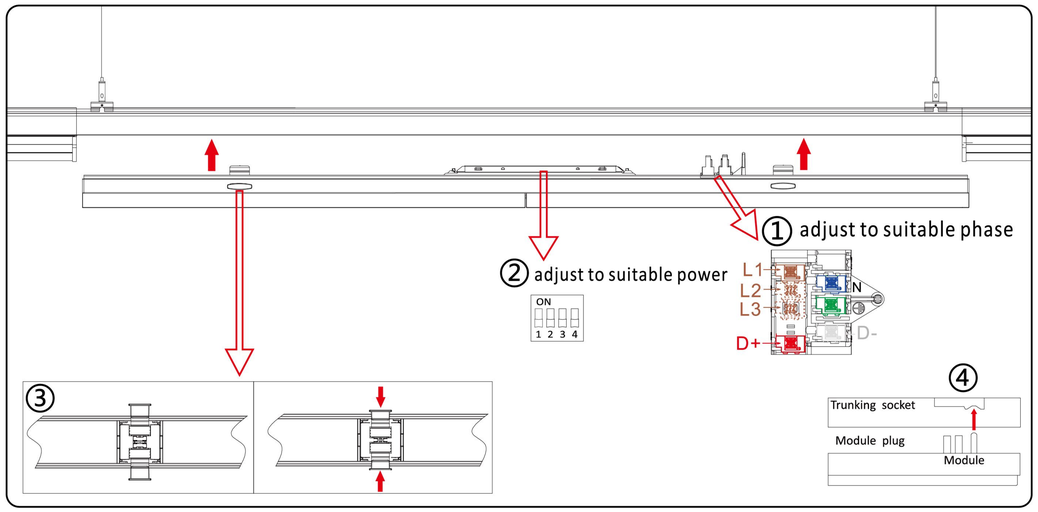
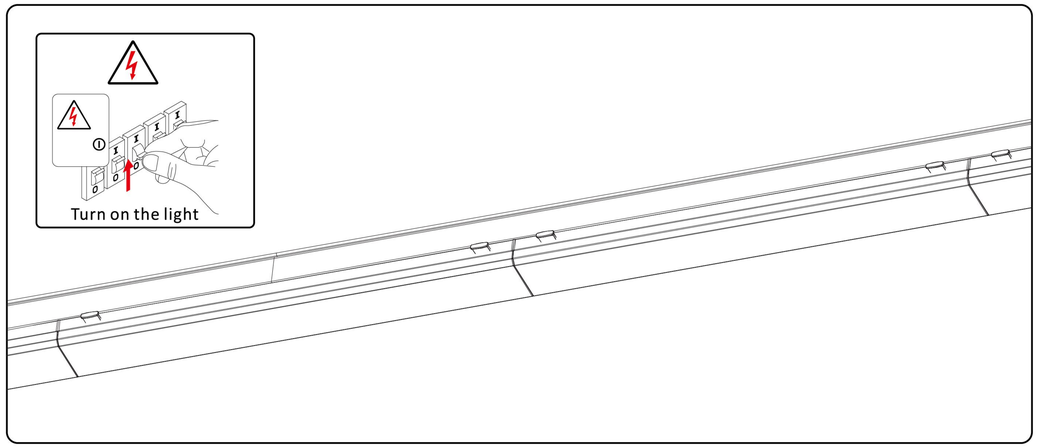
5.Finish installation.